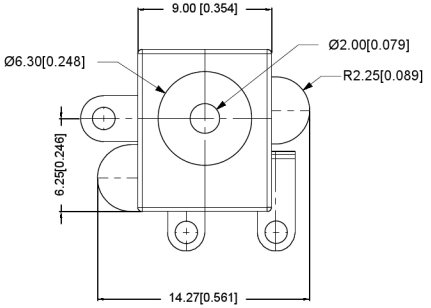

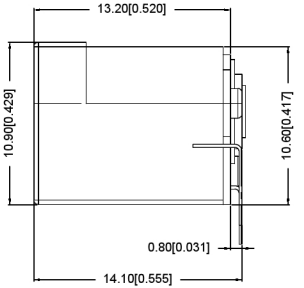

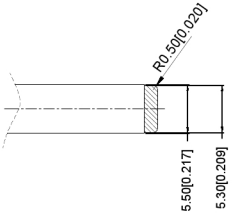

MATING PLUG
Jack Insertion Depth: 8.95mm

SCHEMATIC	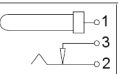
Model	DC-531
Center Pin	Ø2.0 mm
	Ø2.5 mm
	——

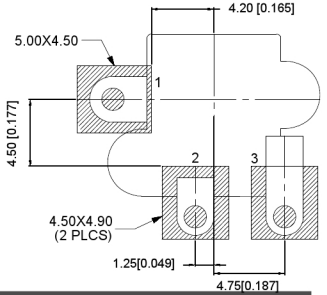

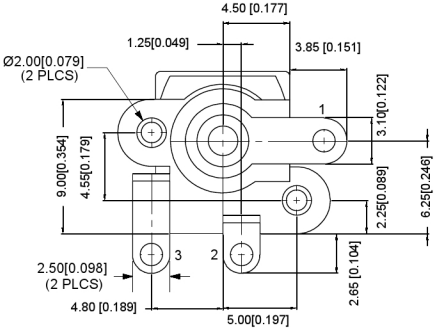

	MATERIAL	PLATING
center pin	Brass	tin
terminal 1	Brass	tin
terminal 2	Phosphor Bronze	tin
terminal 3	Brass	tin
plastic	PA6T	

广东星坤科技股份有限公司

生效	日期

MARK	DESCRIPTION	DATE	REVISED	APPROVED

REVISIONS

文件工程章

www.xk-dg.cn www.helloxkb.com www.helloxkb.cn

ANGLAR	±5°	
X.X	±0.2mm	
X.XX	±0.1mm	
X.XXX	±0.05mm	

UNSPECIFIED TOLERANCES

DSND		DATE		SCALE: N/A	MODEL TYPE: DC POWER JACK
DWN		DATE		VIEW:	PART NO.:
CHKD		DATE		UNIT: mm/in	
APPD		DATE		SIZE: A4	DWG NO.: DC-531-2.0

XKB INDUSTRIAL PRECISION CO.,LIMITED

WEIGHT	SHEET	REVISION
1.0g	1/1	A0